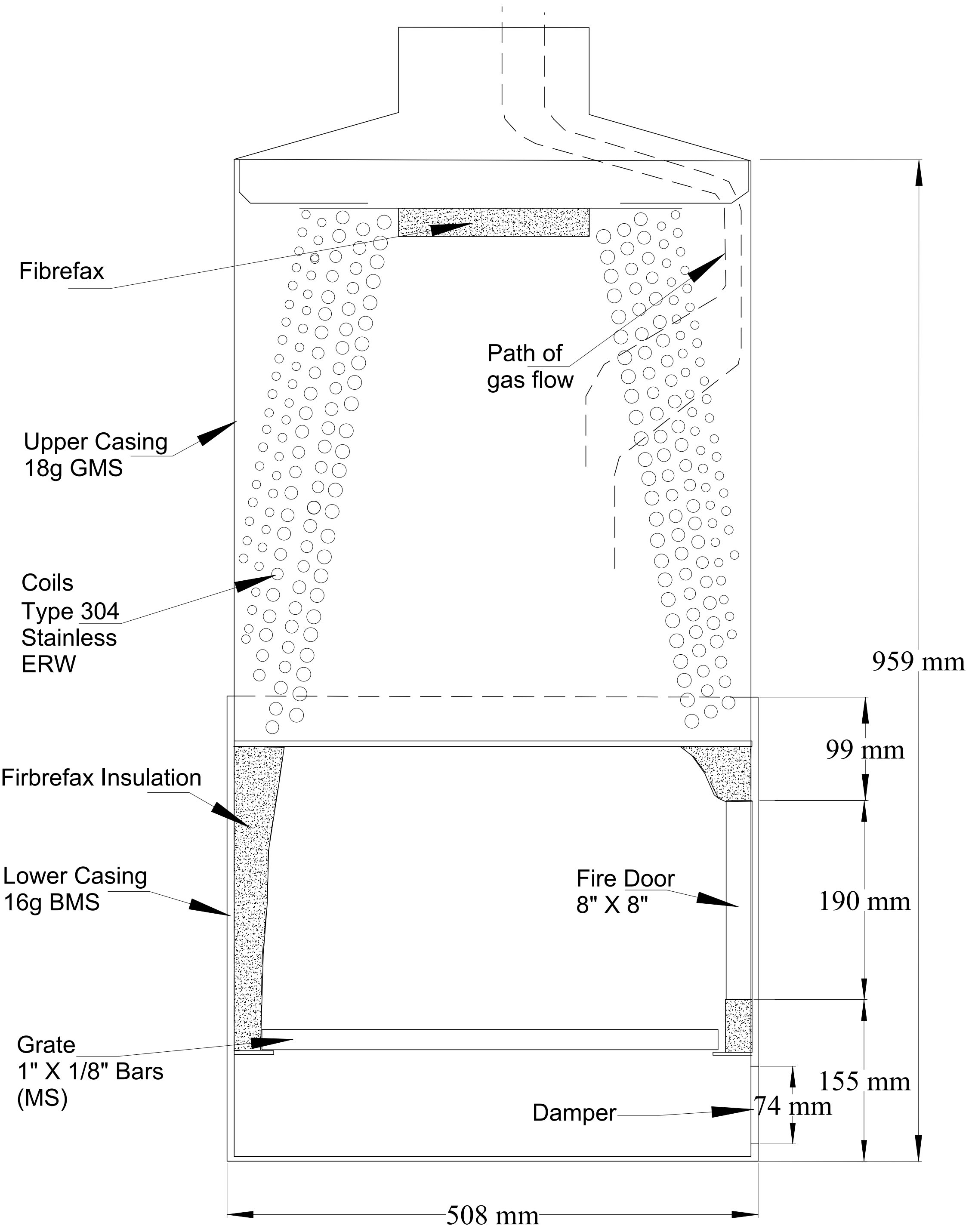
Fibrefax
Path of
gas flow
Upper Casing
18g GMS
Coils
Type 304
Stainless
ERW
959 mm
99 mm
Firbrefax Insulation
Lower Casing
16g BMS
Fire Door
8" X 8"
190 mm
Grate
1" X 1/8" Bars
(MS)
155 mm
Damper
74 mm
508 mm